Specification of Vertical Collimating Mirror (VCM) Chamber Including Top-Side Water Cooling System for TPS 31A Beamline at NSRRC

Version 7
October 2020

.

National Synchrotron Radiation Research Center (NSRRC)
101 Hsin-Ann Road, Hsinchu Science Park, Hsinchu 30076, Taiwan

1. Introduction and scope

This specification describes of the manufacture and delivery of one vertical collimating mirror (VCM) chamber including a top-side water cooling system for TPS 31A beamline at NSRRC. The scope of the work to be provided includes engineering design, fabrication and assembly drawings, materials, manufacture, assembly, inspection, testing of all components, delivery, installation and commission of the top-side water cooled VCM mirror chamber.

2. Layout of beamline

This top-side water cooled VCM mirror chamber will be installed in beamline TPS31A. The layout of beamline TPS31A with VCM and double crystal monochromator (DCM) mode is shown in Figure 1. VCM is located at 28 m from the wiggler source to collect the center fan of sagittal and tangential acceptance of 1.5 mrad × 0.5 mrad (Horizontal× Vertical). The beam height of source is 1350 mm. The incident photon beam grazing angle of VCM is 2.5 mrad and the mirror surface is vertically upward. The heat load at VCM with Si substrate is 112 W with 42 mm × 1000 mm (sagittal × tengential) footprint. This mirror chamber is designed for a nominal height of 1350 mm and will be operated in ultra-high vacuum environment with $\leq 1\times10^{-9}$ torr.

A water cooling system is adopted to top-side cool VCM. The temperature of water is 25°C. The height of copper (Cu) plate is 20 mm. The internal diameter of copper cooling tube is 4.35 mm. The water flow rate is 2L/min. A cooled mask to protect the front edge of the mirror is required.

More detailed description of the mirror chamber is given in the sections below.

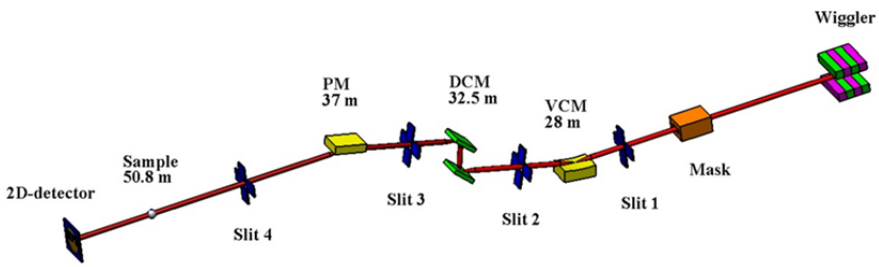

Figure 1. Layout of beamline TPS 31A for vertical collimating mirror (VCM) and double crystal monochromator (DCM) mode. The optical elements include a vertical collimating mirror, a double crystal monochromator and a plane mirror (PM).

3. Coordinate system

Laboratory Coordinate axes and motion directions are defined as shown in Figure 2. Y is the beam propagation direction. Z is vertical direction. And X is horizontal axis perpendicular to both Z and Y. Translations along these coordinate axes are marked in the same way as these axes. Rotations around X, Y, Z are defined as mirror pitch θ, mirror roll χ and mirror yaw φ respectively.

Index of the motion axis M corresponds to the mirror, T to the supporting structure and TB to adjustment bolts at the bottom of the supporting structure.

Precision parameters are defined as follows:

Resolution is amount of motion corresponding to one step of the actuator (full step mode unless specified otherwise).

Accuracy shows maximum difference between the amount of motion commanded to the actuator, and really executed by the mechanics for any motion within the specified range. Absolute accuracy means accuracy within the whole range of motion.

Repeatability is defined as the largest difference between the primary position and the position to which mechanics returns after any loop of travel within the motion range with approach from the same direction as for the primary position.

Lost Motion or Hysteresis is defined as the largest difference between the primary position and the position to which mechanics returns after any loop of travel within the motion range with approach from the opposite direction as for the primary position.

Stability is defined as the largest deviation from the specified position during the specified time.

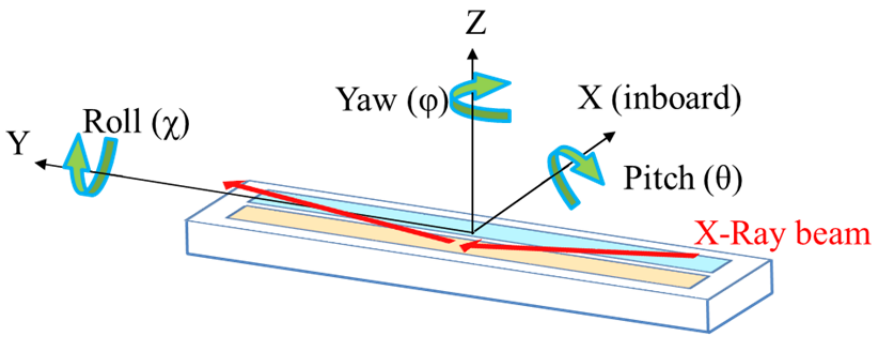

Figure 2. Definition of coordinate for vertical collimating mirror (VCM). The positive sign of X, Y, Z corresponds to inboard, beam propagation direction and upward, respectively.

4. Specifications

4-1 Basic description

This mirror chamber will be applied to mount and adjust the vertical collimating mirror (VCM). The shape and dimension of VCM is shown in Figure 3. The surface of VCM has Platinum (Pt) coating on one half of the clear aperture and the other half clear aperture remains Si substrate. This mirror will be moved laterally for choosing the material of mirror surface of Pt or Si. The orientation of this mirror is reflecting vertically upward. The incident beam is parallel to the horizontal plane (floor plane) with 1350 mm height. The incident glancing angle of VCM is 2.5 mrad. This mirror is designed for a nominal height of 1350 mm and will be operated in ultra-high vacuum.

4-2 Operation conditions

Vacuum pressure : $\leq 1\times10^{-9}$ torr (ultra-high vacuum). Factory test of this pressure will be achieved for 24 hours after baking by 300 l/s turbo molecular pump.

Leak rate : $\leq 5\times10^{-10}$ mbar-liter/sec He

Temperature : 25°C nominal, 200°C maximum during system bake-out (without mirror installed), 120°C maximum during system bake-out (with mirror installed)

Mirror operating position : VCM facing upwards

X-ray energy range : 5 – 30 keV

Nominal height : 1350 mm

Orientation : Reflecting vertically upward

Beam footprint at VCM : 1000 (tangential) × 42 (sagittal) mm^2

Incident beam angle : 0 mrad relative to horizontal

Incident glancing angle of VCM: 2.5 mrad

Cooling : Top-side water cooling

4-3 Geometrical parameters

Geometry shape of VCM : Tangential cylindrical

Dimension of VCM : 1050×120×100 mm^3 (L×W×H) (as shown in Figure 3)

Clear aperture of VCM : 1000×100 mm^2 (L×W)

Tangential radius of VCM : 22.4 km

Substrate of VCM : Si

Coating material : Platinum (Pt) at one-half area of the mirror surface with 1000×50 mm^2 (L×W)

Dimension of mirror chamber system with supporting structure : (be discussed in

detail)

Length: less than 1790 mm (L, flange to flange, with CF4.5”(ICF114) ports)

Width: 800 mm (W)

Height: 1600 mm (H)

(a)

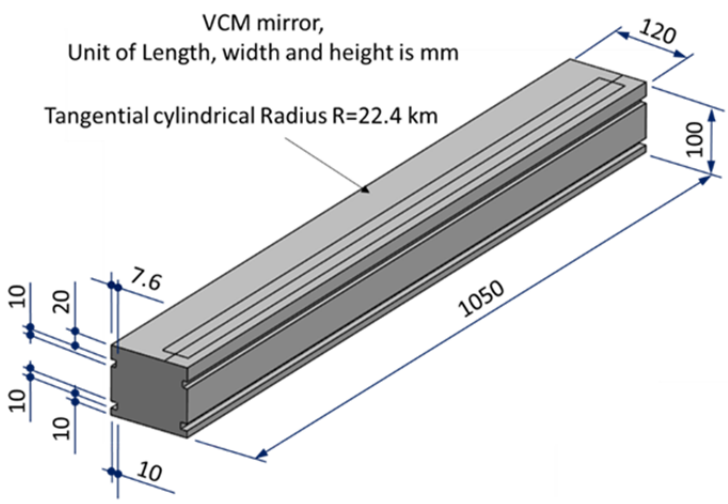

(b)

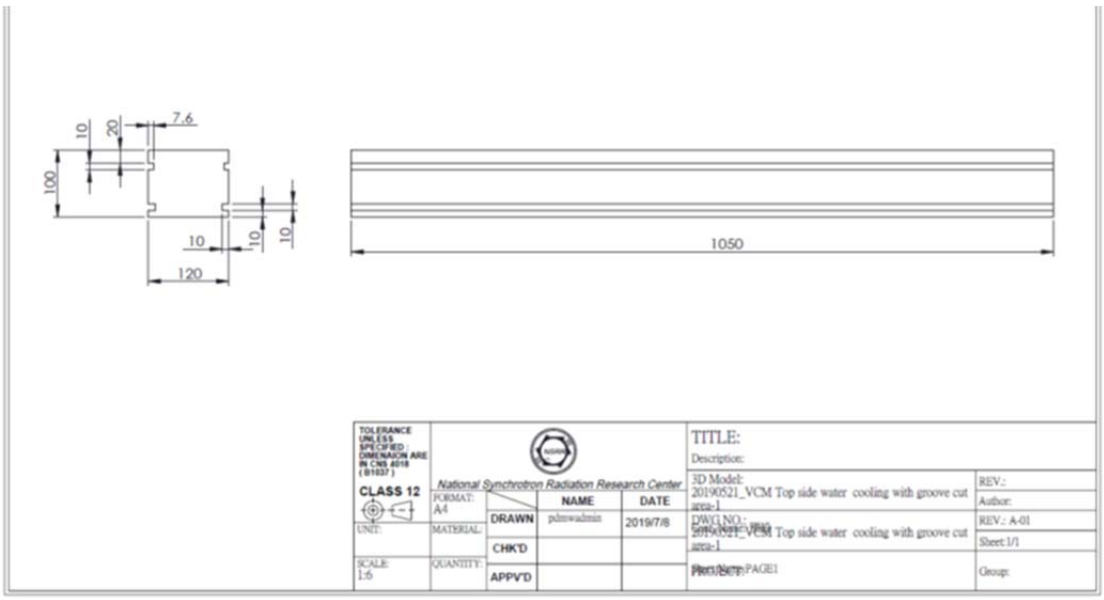

Figure 3. (a) Sketch of the vertical collimating mirror (VCM) of TPS 31A, (b) Drawing of VCM. VCM is a tangential cylindrical mirror with radius (R) of 22.4 km and dimension of 1050×120×100 mm^3 (L×W×H). The substrate of VCM is Si. The coating material is Platinum (Pt) at one-half area of the mirror surface with 1000×50 mm^2 (L×W) and the other half clear aperture remains Si substrate. Two grooves on top sides of substrate are for optimizing the effect of top-side water cooling. The distance between the mirror surface and the top-edge of groove is 20 mm. The width and depth of groove is 10 mm and 7.6 mm, respectively. Two grooves on bottom sides of substrate are for clamping

mirror. The distance between the mirror bottom and the bottom-edge of groove is 10 mm. Both width and depth of groove is 10 mm.

4-4 Mirror adjustments

The mirror adjustment mechanism should provide adjustments for the mirror in X-direction, Z-direction, pitch, roll and yaw. The mechanism must be remotely controlled by stepping motors which are mounted and actuated inside/outside vacuum chamber. The stepping motor is adopted for the first priority for both in-vacuum motors and in-air motors. The loading capacity of each translation stage should be ≥ 50 kg.

All motors and absolute encoders are provided by vendor. NSRRC will provide motor controllers including field cabling, drivers, absolute encoder readout system.

Mirror adjustment : X_M, Z_M, $Pitch_M$, Raw_M, Yaw_M – motorized
Supporting structure adjustment: X_{TB}, Y_{TB}, Z_{TB}, $Pitch_{TB}$, Raw_{TB}, Yaw_{TB} – manual

4-4-1 Lateral translation X_M

The X-direction translation stage is used for selecting Pt coating or Si substrate of VCM. It is operated by using the in-vacuum motors and stages those are mounted inside the vacuum chamber. The mechanism should be able to move to the mirror into the operation position, while the chamber is under vacuum, at any mirror angle setting. That is, it is not necessary to set the mirror at a particular angle to translate the mirror.

Travel range	:	± 50 mm
Actuator	:	two in vacuum (5-phase or 2-phase) stepping motors for UHV
Resolution	:	≤ 0.5 μm at full step
Repeatability	:	≤ 1 μm
Stability	:	≤ 1 μm over 4 hours
Limit switches	:	mechanical
Position reading	:	Linear encoder
Encoder resolution	:	≤ 0.5 μm

4-4-2 Vertical translation Z_M

This translation stage is used for fine height alignment for mirror. The mechanism should be able to move to the mirror into the operation position, while the chamber is under vacuum, at any mirror angle setting. That is, it is not necessary to set the mirror at a particular angle to translate the mirror.

Travel range	:	± 20 mm
Actuator	:	three in-air 5-phase stepping motors
Resolution	:	≤ 0.5 μm at full step
Repeatability	:	≤ 1 μm
Stability	:	≤ 1 μm over 4 hours.
Limit switches	:	mechanical
Position reading	:	Linear encoder
Encoder resolution	:	≤ 0.5 μm

4-4-3 Pitch θ_M adjustment

This mechanism is for changing pitch of mirror. The rotational axis of this angular motion corresponds to one of the three mutually perpendicular axes through the pole of the mirror.

Travel range	:	± 2°
Actuator	:	three in-air 5-phase stepping motors for Z_M adjustment
Resolution	:	≤ 0.5 μrad
Repeatability	:	≤ 1 μrad
Stability	:	≤ 1 μrad over 4 hours
Limit switches	:	mechanical

4-4-4 Roll χ_M alignment

This mechanism is used for roll alignment of mirror. The rotational axis of each of these angular motions corresponds to one of the three mutually perpendicular axes through the pole of the mirror.

Travel range	:	± 2°
Actuator	:	three in-air 5-phase stepping motors
Resolution	:	≤ 2 μrad
Repeatability	:	≤ 5 μrad
Stability	:	≤ 5 μrad over 4 hours
Limit switches	:	mechanical

4-4-5 Yaw φ_M alignment

This mechanism is used for yaw alignment of mirror. The rotational axis of each of these angular motions corresponds to one of the three mutually perpendicular axes through the pole of the mirror.

Travel range	:	± 2°
Actuator	:	two in-vacuum (5-phase or 2-phase) stepping motor for UHV

Resolution	:	≤ 2 μrad
Repeatability	:	≤ 5 μrad
Limit switches	:	mechanical

Each motorized movement is equipped with a high precision of ≤ 0.5 μm electrical limit switch and mechanical hard stop. The optical encoders (including datum point) are preferred for monitoring all the linear translation in this supply. The limit switches and the encoders for the in-vacuum movements must be ultra-high vacuum compatible. The specification of motorized movement performances is summarized in Table 1.

Table 1. Specification of the mirror alignment system

Motion	**Parameter**	**Specification**
Lateral translation X_M	Range Resolution Repeatability Stability Drive	± 50 mm ≤ 0.5 μm ≤ 1 μm ≤ 1 μm over 4 hours 2 in-vacuum stepping motors; Absolute encoder & limits switches to be fitted
Vertical translation Z_M (normal to mirror surface)	Range Resolution Repeatability Stability Drive	± 20 mm ≤ 0.5 μm ≤ 1 μm ≤ 1 μm over 4 hours 3 in-air stepping motors; Absolute encoder & limits switches to be fitted
Pitch θ_M	Range Resolution Repeatability Stability	± 2 degree ≤ 0.5 μrad ≤ 1 μrad ≤ 1 μrad over 4 hours
Roll χ_M	Range Resolution Repeatability Stability	± 2 degree ≤ 2 μrad ≤ 5 μrad ≤ 5 μrad over 4 hours
Yaw φ_M	Range Resolution Repeatability	± 2 degree ≤ 2 μrad ≤ 5 μrad

4-5 Mirror holder and water cooling system

The mirror holder has cooling pipes for top-side water cooled method. The cooling pipes and their supports should be made to isolate any transmitted vibration or

torque to mirror.

A mechanism have to be design to detect the temperature of VCM. Thermocouple, cable, feedthrough and controller for the mechanism should be also provided.

A water-cooled mask is required to protect the front edge of the mirror from damage from mis-steered beam.

All cooling lines should include airguards. There are no water-vacuum connections permitted.

4-5-1 Top-side water cooling system for VCM

The top-side water cooling system for VCM is shown in Figure 4. Two copper (Cu) plates with groove are touched top-sides of VCM.

Height of copper plate : 20 mm
Internal diameter of Cu cooling tube: 4.35 mm
Water flow rate : 2L/min.
Temperature of water : 25°C

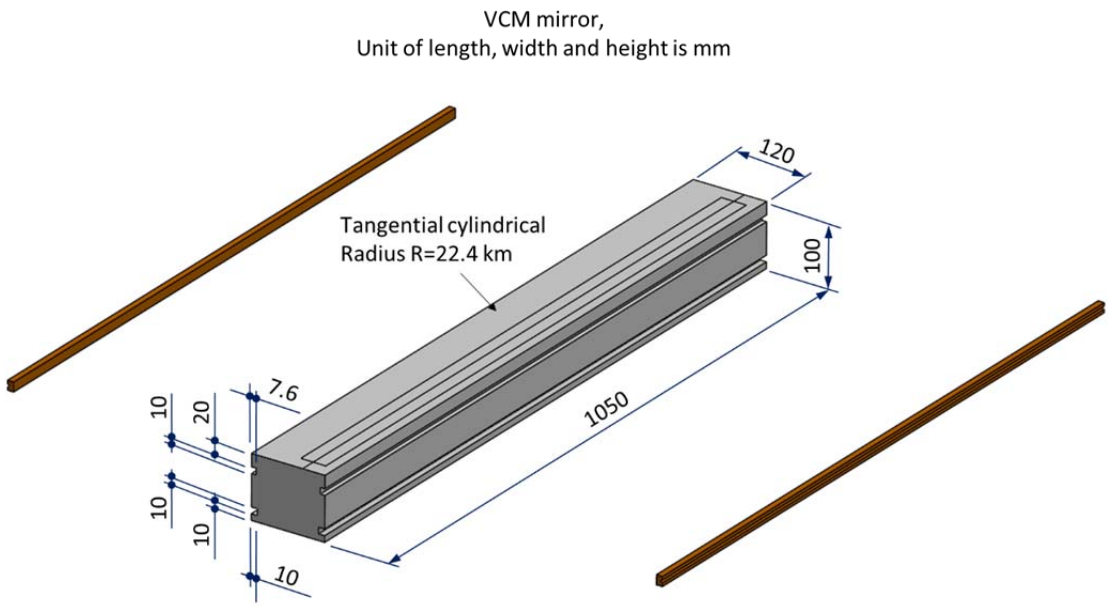

Figure 4 Sketch of top-side water cooling system for vertical collimating mirror (VCM) of TPS 31A. Two copper (Cu) plates with groove are touched top-sides of VCM. The height of Cu plates is 20 mm. Cu water pipe with inner diameter of 4.35 mm is welted on the groove area of Cu plates. Water flow rate is 2 L/min, and water temperature is 25°C. Two grooves on top sides of mirror substrate are for optimizing the effect of top-side water cooling. The distance between the mirror surface and the

top-edge of groove is 20 mm. The width and depth of groove is 10 mm and 7.6 mm, respectively. Two grooves on bottom sides of mirror substrate are for clamping mirror. The distance between the mirror bottom and the bottom-edge of groove is 10 mm. Both width and depth of groove is 10 mm.

4-5-2 Temperature monitoring

K-type thermocouples with the Kapton insulated are mounted on the mirror and mirror holder. The detail number and positions will be discussed.

NSRRC will provide K-type thermocouple readout system.

4-5-3 Mirror pitch θ_M vibration

Mirror pitch vibration of $\leq 0.2\ \mu$ rad RMS in the 1-500 Hz physical band without water flow.

4-6 Miscellaneous

This ultra-high vacuum chamber must be fitted with ports appropriate for incoming and outgoing beams, pumping, ion gauge roughing etc., and the stepping motors used for driving the mirror rotation and translation. The model number for all stepping motors should be shown in the design drawing. The Successful Contractor should provide all mating connectors for the motorized control. Moreover, the pin assignments of motors are also required.

NSRRC will provide the motor controllers, drivers, absolute encoder readout system and commercial vacuum components including ion pump, valves, and vacuum gauges.

4-7 Supporting Structure

The Successful Contractor should supply a decoupling mechanism for supporting the vacuum chamber and mirror independently.

The mirror assembly secured with the in-vacuum base plate inside the vacuum chamber is supported on massive granite. The purpose of in-vacuum base plate is not only for providing the precision alignment but also the shielding of primary scattering line from the reflection surface of mirror to the in-vacuum mechanism directly.

The massive granite and the stand of chamber are both secured independently on floor. The link for the two independent supports is only via the vacuum bellows which are located on the bottom side of vacuum chamber.

The granite provides a rigid and stable platform to minimize the interference of

vibration transmitted from the ground to the mirror. The whole system can be manually adjusted for alignment. An advance design for improving the stability of granite support is encouraged. The ion pump should be independently supported to prevent transferring its load to the chamber.

The vacuum chamber should be supported from the floor via a pair of mild steel support columns. The columns shall be fabricated from square section beams and finished in an epoxy powder coat for corrosion protection.

The vacuum chamber will fit to the supports via 4 adjustable feet with ranges larger than z: ± 15 mm, x: ± 15 mm, y: ± 15 mm.

4-7-1 X_T, Y_T, Z_T translation

Actuator	:	Manual
Motion range	:	≥ ± 15 mm (relative to nominal height of 1350 mm)

4-8 Vacuum Compatibility Requirements

The vacuum chamber and all internal components must be fabricated from ultra-high vacuum compatible materials. Inside the chamber, stainless steel should be type 304L, aluminum should be type 6061-T6, all ceramics must be vacuum fired to minimize water content, and all fastening screws must be silver plated. The types of materials used (including any ultra-high vacuum lubricants) are subject to NSRRC approval.

The product must meet the following vacuum requirements

- No organic or high vapor pressure inorganic materials may be on any of the internal parts or on the vacuum side of the chamber wall after final cleaning.
- The vacuum chamber and all of its internal parts must not produce carbon-containing vacuum contaminants. The partial pressures should be ≤ 1×10^{-11} torr after normal bake-out procedures in ultra-high vacuum environment.
- The ultimate vacuum pressure of ≤ 1×10^{-9} torr is achieved within 24 hrs through a pump with pumping speed of 300 liter/sec after bake-out. The proportion of ultimate vacuum pressure to pumping speed is predicted as a constant even if using a different pumping speed for the test.
- The total leak rate as measured by standard He leak detection techniques must be ≤ 5×10^{-10} mbar.l/s He.
- All measurements should be done after a bake-out at ≥ 200℃ for ≥ 8 hrs at least prior to the delivery.

4-9 Heating wire

The heating wires for baking the ultra-high vacuum chamber are included in this offer and are welded uniformly on the chamber base, body and lid. Moreover, the chamber could be heated up to 200℃ within 24 hrs from the room temperature without the mirror installed. The layout of heating wire should be subjected to NSRRC approval. The input voltage of heater wire is 200VAC ~ 240VAC.

NSRRC will provide heater-wire controllers.

4-10 Metallic plate

In order to isolate the vibration from the floor there is a metallic plate which grouted by epoxy grout on the floor prior to the installation of mirror system, for securing the granite and improving the stability of system further. The Successful Contractor should provide a design applied to the metallic plate to adjust position of granite in x and y direction within ±10 mm by the pushers.

The plate will be manufactured by vendor and be shipped with a separated box. NSRRC will install it prior to installation.

4-11 Flanges and feedthroughs (number, dimension and position will be discussed in detail)

Beam entrance port	:	1 x DN63 4.5”CF (ICF114) fixed (with blank cover), height of flange center is 1350 mm, horizontally
Beam exit port	:	1 x DN63 4.5”CF (ICF114) fixed (with blank cover), height of flange center is 1350 mm, horizontally
Ion pump port	:	1 x DN150 8”CF (ICF203) rotatable (with blank cover)
Turbo pump port	:	1 x DN150 8”CF (ICF203) rotatable (with blank cover)
View ports	:	4 x DN150 8”CF (ICF203) fixed with glass windows
Pressure burst window	:	1 x DN40 2.75”CF (ICF70) -side of the chamber
Motors, limits, encoders	:	2 x DN63 4.5”CF (ICF114) with connectors -base of the chamber
Thermocouples	:	2 x DN40 2.75”CF (ICF70) with connectors -side of the chamber
Vacuum gauge	:	2 x DN40 2.75”CF (ICF70) with blank cover -side of the chamber
Laser interferometer port	:	4 x DN40 2.75”CF (ICF70) with blank cover - side of the chamber
Service ports	:	2 x DN40 2.75”CF (ICF70) with blank cover

- side of the chamber
1 x DN160 8”CF (ICF203) with blank cover

4-12. Electrical System

Electrical system of the mirror chamber consists of motion control system included motor controller, encoder readout system, heater control system and thermocouple monitoring system. An EPICS Client and a Web Client are available. This item will transfer the GUI to a remote area.

NSRRC will provide hardware motor controllers including field cabling, drivers, absolute encoder readout system.

5. Alignment and handling

5-1 Alignment

The mirror chamber should be equipped with appropriate fittings (survey monuments, reference points, etc.) to permit alignment when the vacuum vessel is closed. These fitting shall provide markers defining both the vertical and the horizontal position of the incoming and outgoing X-ray beams.

5-2 Handling

All heavy components of the mirror chamber shall have provision for handling and lifting by a crane.

6. Responsibilities of the vendor

(1) Following documents are supplied by vendor with the VCM mirror chamber as a standard:

(a) Assembly drawings (prints and DXF files).

(b) Complete drawings of electrical connections.

(c) Complete technical documentation in English on motors, drivers, encoders, control electronics and cabling diagrams, etc., as well as a complete operation manual in English of the mirror chamber and top-side water cooling system, including in full details the maintenance schedule and procedures to mount the mirror.

(d) Inspection and test reports.

(e) Final inspection and calibration protocol.

(f) Site installation report.

(2) The final design of the VCM mirror chamber must be approved by the NSRRC before the actual fabrication process begins.

(3) The VCM mirror chamber must assembled, tested, and calibrated before shipping

to NSRRC. The vendor shall submit a detailed schedule specifying the tests and calibration to be taken. Following tests will be performed for this mirror chamber prior to shipping and at the NSRRC site during the site installation unless otherwise specified. All the inspection data must be sent to NSRRC for approval prior to shipping.

(a) Motion test for all motorized motions, including travel range, resolution, repeatability and limit switches. Refer to 4-4 Mirror adjustments which is summarized in Table 1.

(b) Mirror beam position stability measurement, over 4 hours, refer to 4-4 (by autocollimator)

Lateral direction $X_M \leq 1\ \mu m$

Vertical direction $Z_M \leq 1\ \mu m$

Pitch $\theta_M \leq 1\ \mu rad$

Roll $\chi_M \leq 5\ \mu rad$

(c) Mirror pitch vibration test of $\leq 0.2\ \mu rad$ RMS without water flow, refer to 4-5-3 (by laser interferometer). Laser interferometer is provided by NSRRC during the site installation.

(d) All dimension inspection.

(e) Ultimate vacuum pressure test, refer to 4-8 Vacuum compatibility requirement. Pumps, valves and gauges is provided by NSRRC during the site installation.

(f) Leak check, refer to 4-8. Leak detector is provided by NSRRC during the site installation.

(g) RGA test, refer to 4-8. This test will be omitted at site installation.

(4) Preparation for delivery

(a) The finished pieces must be thoroughly cleaned and free from any organic low-vapor pressure material or cutting fluid.

(b) This mirror chamber must be delivered by the condition of DPU NSRRC's jobsite Taiwan as per incoterms 2020.

(c) Packing for shipment must insure that mirror chamber is insulated from severe shock and rough handling. Shock sensors are affixed directly to packing boxes to detect and record impact and mishandling of fragile. Packing marking shall indicate the fragile nature of the contents.

(5) The final acceptance test must be performed on site at the NSRRC. The supplier is responsible for shipping, installation and test of the instrument at the NSRRC site.

(6) Taxes

In the event of the Seller shall dispatch their employee to Taiwan in order to perform the Contract, Taiwan (R.O.C.) government will impose withholding tax

on all individual income taxes of such employee during the period of Taiwan. The rate of such withholding tax is 20%, which may vary according to applicable tax treaties.

(7) Vendor shall provide any specific tools required to mount, dismount or align the parts of the mechanics.

(8) Vendor shall provide a time schedule for all activities covered by the contract.